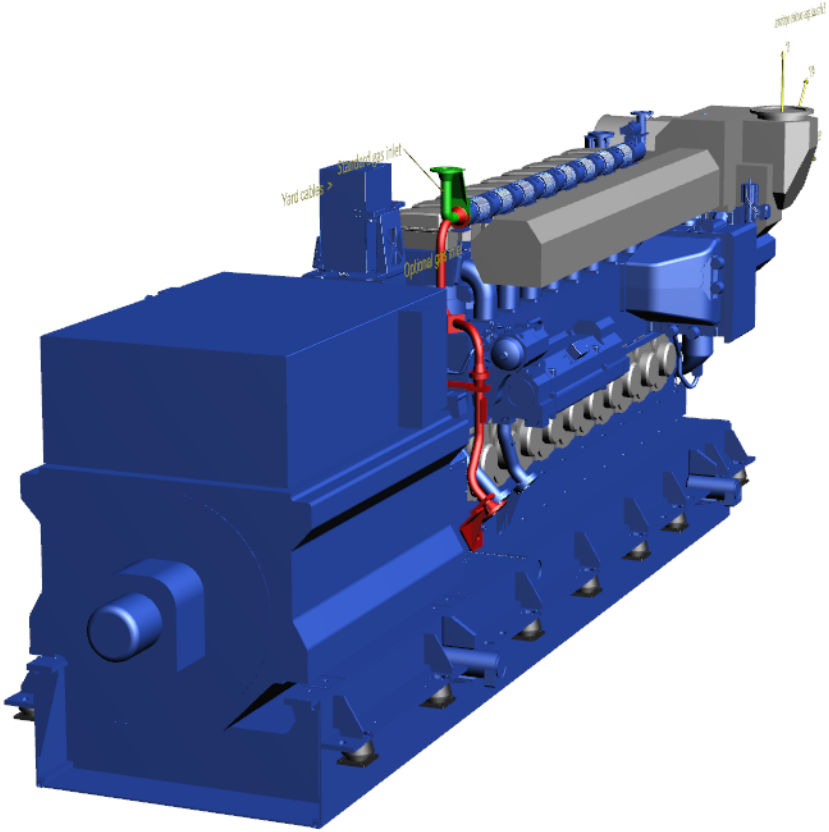
Yard cables >
Standard gas inlet
Optional gas line