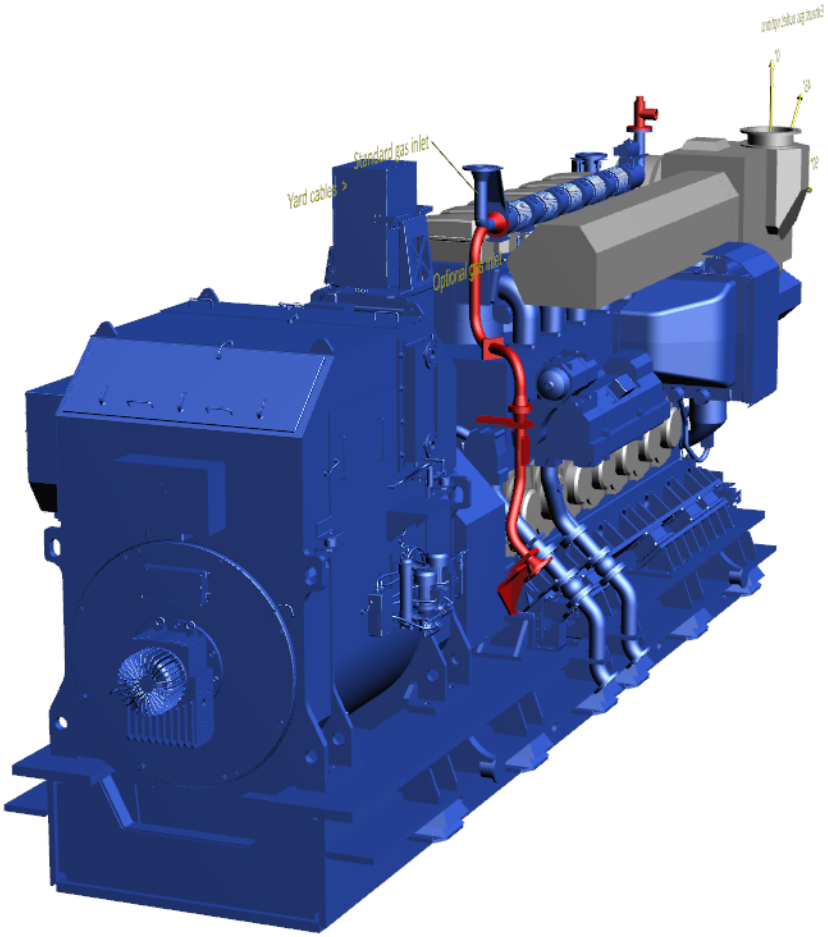
Standard gas inlet
Yard cables
Optional gas inlet