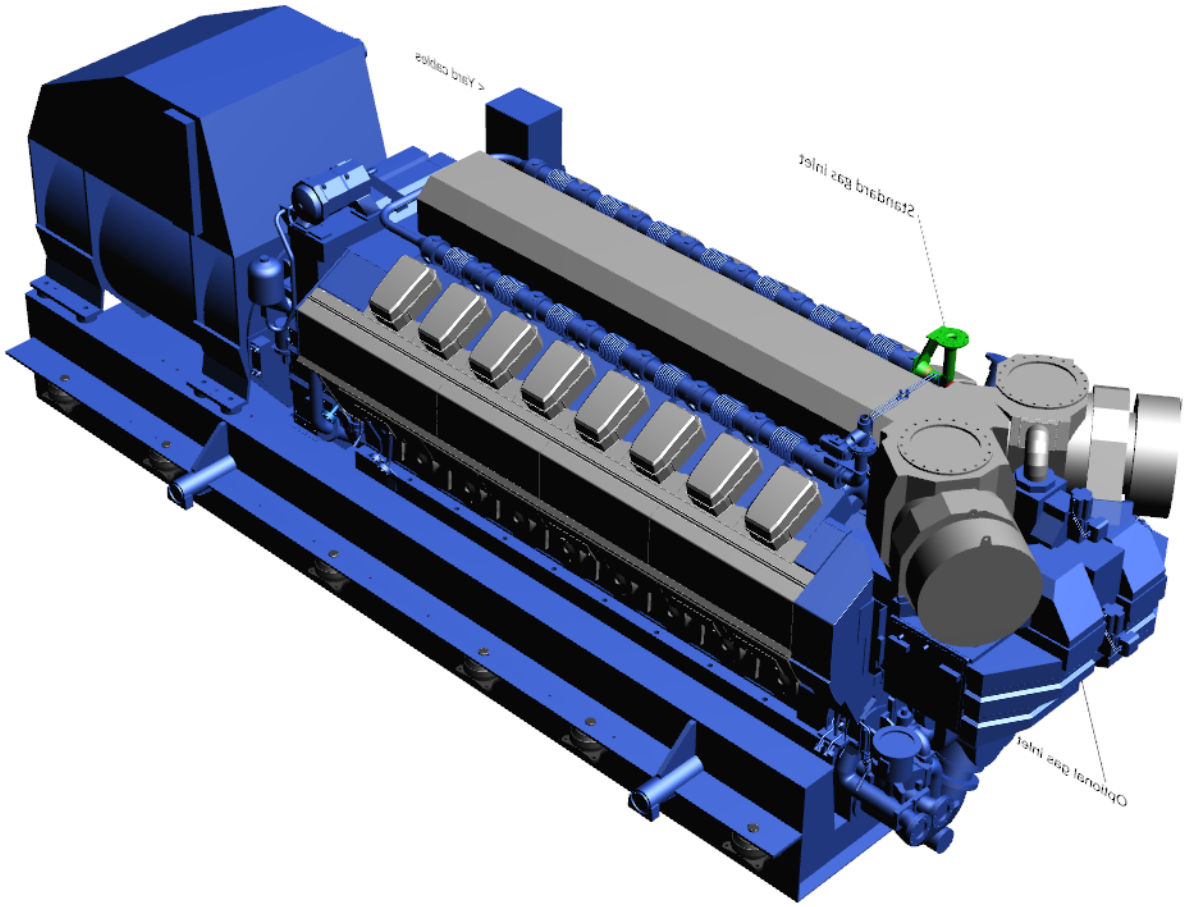
Optional gas inlet
Standard gas inlet
< Yard cables