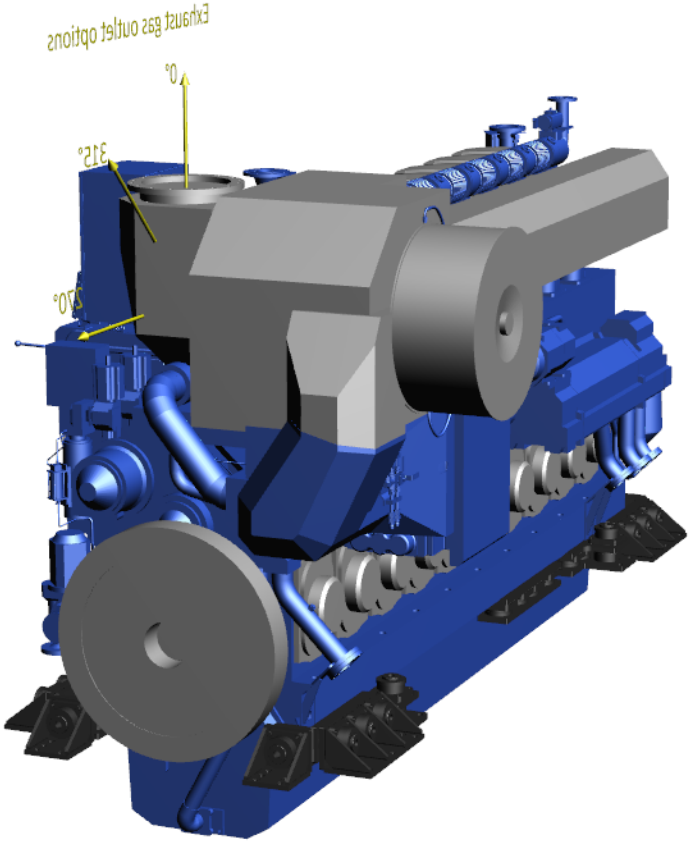
270°
315°
0°
Exhaust gas outlet options