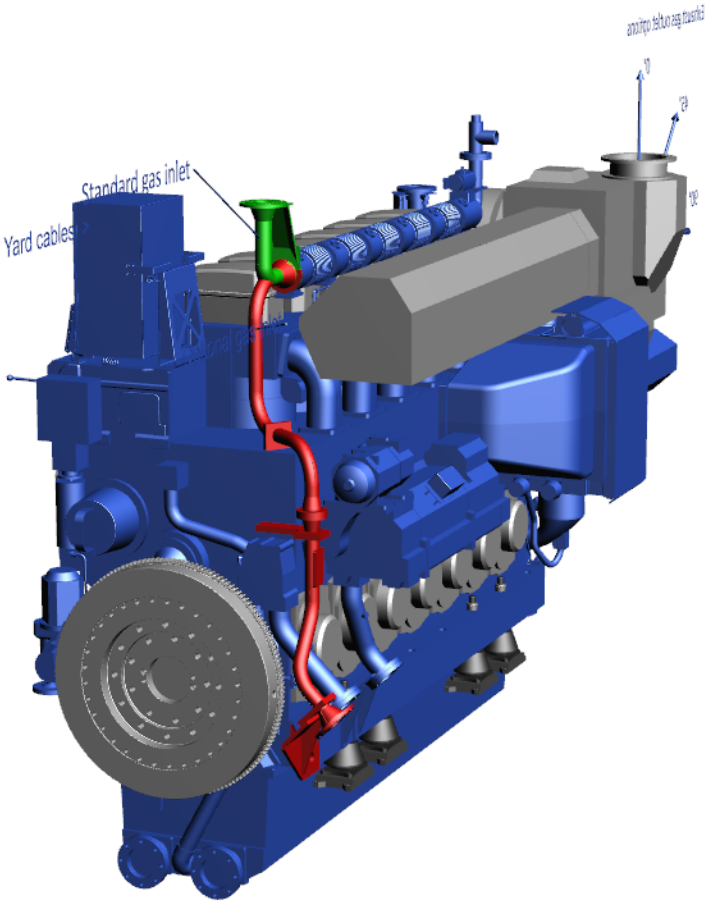
Standard gas inlet
Yard cables