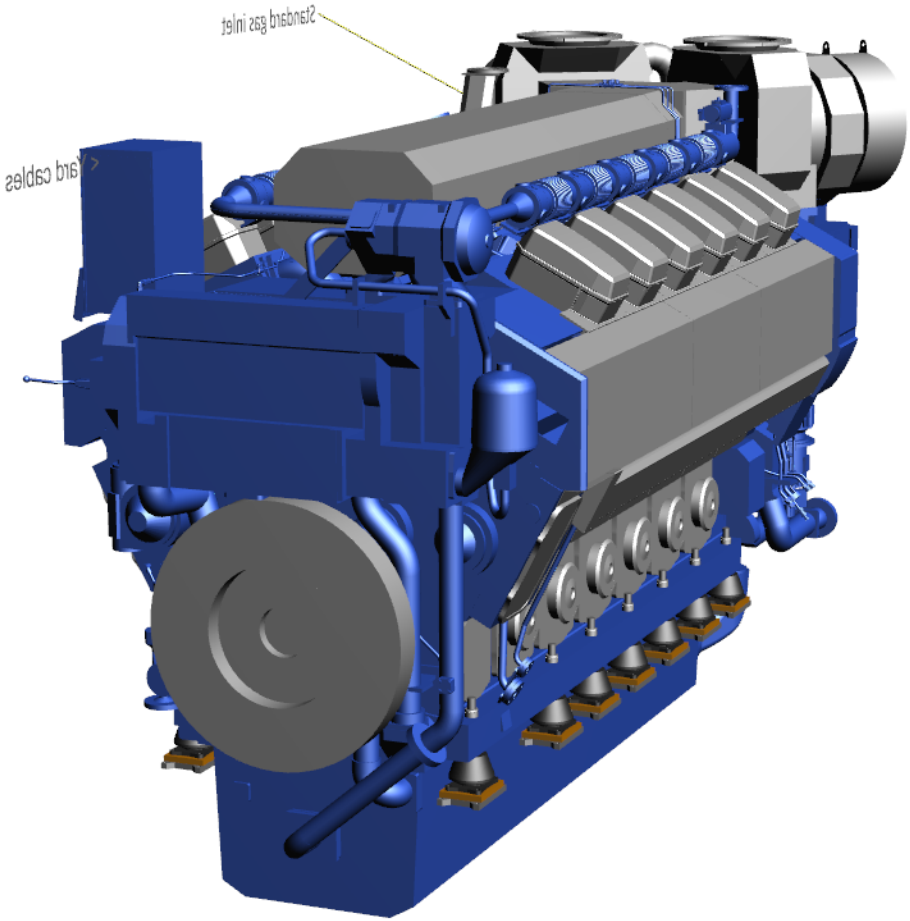
Yard cables
Standard gas inlet